TORONTECH™

CATALOGUE

2014

TTAAT-Series of Low Pressure Heater Drainage Pumps

PRODUCT BROCHURE

TORONTECH™ PUMPS

TORONTECH.COM

TORONTECH™

Torontech™ is a leading North American based international manufacturer and supplier of pumps, pipes, valves & actuators. The Torontech™ group has established an extensive network in the USA as well as international markets and remains to be a preferred vendor of choice supplying quality pumps for today's leading corporations.

Creating comprehensive solutions for our clients has always been the core value of our company. From sales, to order execution, and post-sales support; every staff member is here to assist you in selecting the solution that best suits your unique requirements and budget.

The Torontech™ group offers a complete range of quality pumps that are,ANSI to ISO approved and engineered to last, ensuring your company continuous production without interruptions.

Since the beginning, we have succeeded in only offering quality manufactured pumps that are currently being used worldwide. We offer the best value for your investment and provide world-class support.

Due to the demand for our quality pumps, Torontech™ has experience explosive growth primarily in the oil & gas, water filtration and chemical refinery industries.

We offer an extensive range of solutions and products for oil & gas projects, refineries, petrochemical plants, and marine applications. Our main class of pumps includes API (American Petroleum Institute) Standard, Mining, Water & Sewage and Firefighting applications. The pumps are offered in various configurations depending on orientation of the pump, required head and type of fuel used for operation.

CONTENTS

General description 01
The significance of the type 01
About the structure 01
Sectional drawing 02
Performance table 03
Performance curve 03
Overall dimension 04

TORONTECH™
Pumps and Valves
TTAAT

TTAAT-Series of Low Pressure Heater Drainage Pumps

GENERAL DESCRIPTION

TTAAT type drainage pump for low pressure heater is used for conveying the water in low pressure heater for power station. The temperature ofliquid conveied is not over 120℃ except 150TTAAT-90×2 type pump, for which the temperature is not over 130℃. This kind of pump is of good NPSH performance. It is suitable for the condition oflower NPSH.

THE SIGNIFICANCE OF THE TYPE

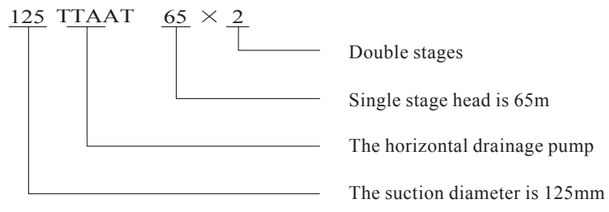

ABOUT THE STRUCTURE

This pump consists of stator, rotor, rolling bearing and shaft seal.

1. Stator: consists of pump casing and casing cover etc.,jointed with bolts to form theworking room. Flanges on both inlet and outlet are horizontally directed.
2. Rotor: consists of shaft, impeller, inducer and shaft sleeve etc., the shaft transmits the power to the impeller to have it work: on both ends of the shaft there are mounted replaceable shaft sleeve foprotecting it.
3. Rolling bearing: consists of bearing body, bearing, bearing gland etc. and uses lubricating oil.
4. Shaft seal: packing seal and mechanical seal

Packing seal: consists of packing gland, packing, packing sleeve, packing etc., the liquid inside of the sealing-work room acts as water sealing, cooling and lubricating. The water for water sealing comes from the pressured water inside of the pump.

Mechanical seal: consists of mechanical seal, mechanical seal gland etc., the rinsing liquid for the mechanical seal comes from the pressured water inside of the pump.

Besides, the pump is actuated directly by the prime mover via an elastic device. The pump can move either TTAAT CW or CCW viewing from the prime mover.

Torontech Inc. - Canada
North American Headquarters
Tel: +1.416.368.2721
Fax: +1.416.981.7652
Email: sales@torontech.com
www.Torontech.com

SECTIONAL DRAWING

Section Drawing for 80TTAAT -43×4 Type Drainage Pump for Low Pressure Heater

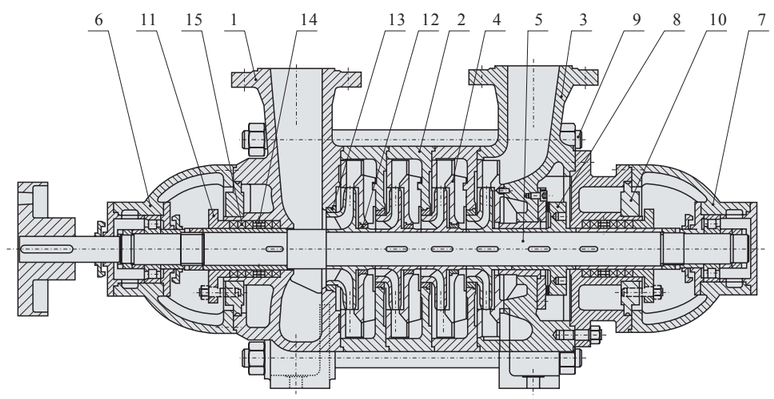

1	Inlet section
2	Middle section
3	End section
4	Guide vane
5	Rotor
6	Bearing A
7	Bearing B
8	Balance disc
9	Plate bolt
10	Stuffing cooling Cover
11	Stuffing gland
12	Guide vane sleeve
13	Seal ring
14	Stuffing ring
15	Stuffing

Section Drawing for TTAAT Type Drainage Pump for Low Pressure Heater

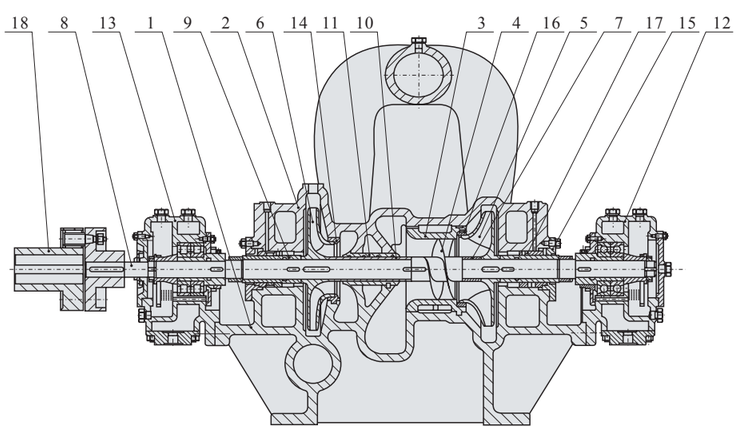

1	Pump casing
2	Casing cover
3	Sleeve
4	Inducer
5	First stage Impeller
6	Second stage impeller
7	Impeller bush
8	Shaft
9	Shaft sleeve
10	Middle section sleeve
11	Interstage seal sleeve
12	Right bearing
13	Left bearing
14	Double suction seal ring
15	Mechanical seal gland
16	Seal ring
17	Mechanical seal
18	Flexible coupling

TORONTECH™
Pumps and Valves
TTAAT

TTAAT-Series of Low Pressure Heater Drainage Pumps

TTAAT- PERFORMANCE TABLE

Type	Capacity Q		Head	Speed	Power(kw)		Eff	NPSHr	Weight Pump/stool
	m^3/h	L/s	(m)	(r/min)	(Shaft)	(Motor)	η %	(m)	(kg)
80TTAAT-43×4	28.5 36 43	7.9 10 11.9	182 170 156	2950	25 27.8 29.94	Y200L2-2 37	56.5 60 61	2 2 2.3	287/100
100TTAAT-65 ×2	28 36 43	7.8 10 11.9	134 130 124	2930	21.3 23.2 24.5	Y200L1-2 30	49 55 59	1.6 1.5 1.5	300/132
125TTAAT--65×2	43 57 67	11.9 15.8 18.6	133 130 125	2930	27 31 34	Y200L2-2 37	58.5 65 67	1.6 1.5 1.5	333/138
150TTAAT-78×2	54 69 82.8	15 19.2 23	163 156 145	2970	41.3 48.1 54	Y250M-2 55	58 61 60.5	1.9 2 3	430/160
150TTAAT-90×2	104 134 161	28.9 37.2 44.7	190 180 166	2980	85 96.5 105.7	Y315S-2 110	63.3 68 68.8	2.2 2 2.5	436/211
150TTAAT-115×2	105	29.2	230	2980	109.6	Y315M-2 132	60	2.3	531
200TTAAT-65×2	182	50.6	130	2950	86.6	Y315S-2 110	74.5	2.5	550

PERFORMANCE CURVE

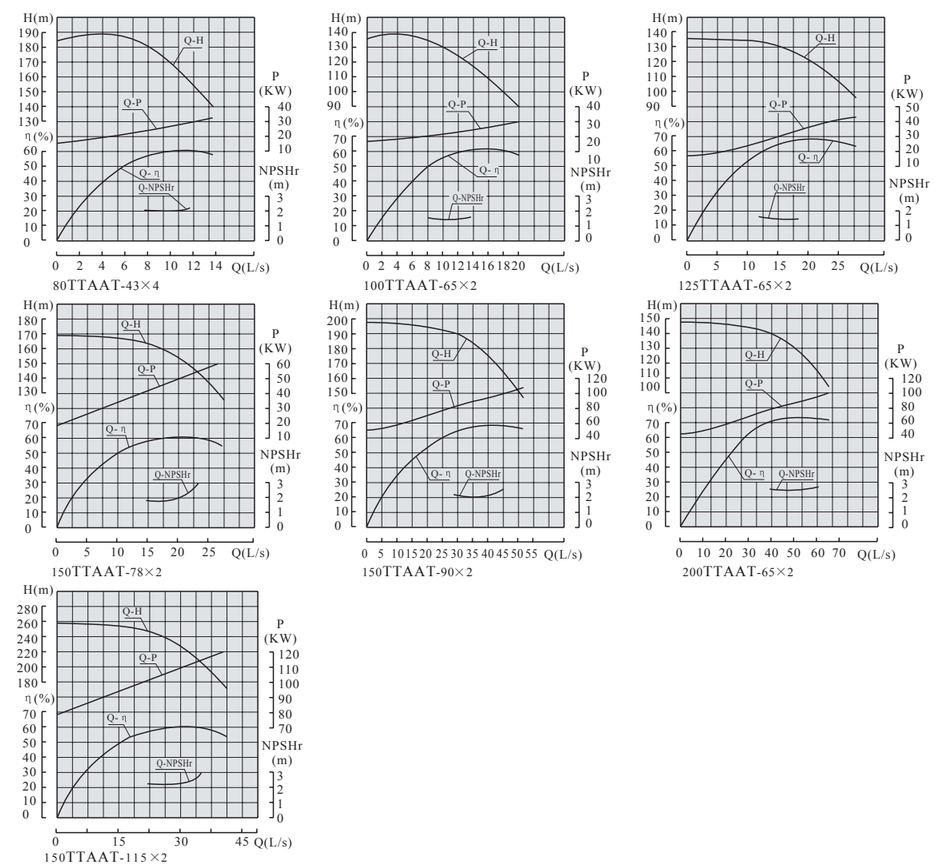

Torontech Inc. - Canada
North American Headquarters
Tel: +1.416.368.2721
Fax: +1.416.981.7652
Email: sales@torontech.com
www.Torontech.com

Torontech Inc. - Canada
North American Headquarters
Tel: +1.416.368.2721
Fax: +1.416.981.7652
Email: sales@torontech.com
www.Torontech.com

OVERALL DIMENSION

Overall Dimension for 80TTAAT-43×4 Type Drainage Pump for Low Pressure Heater

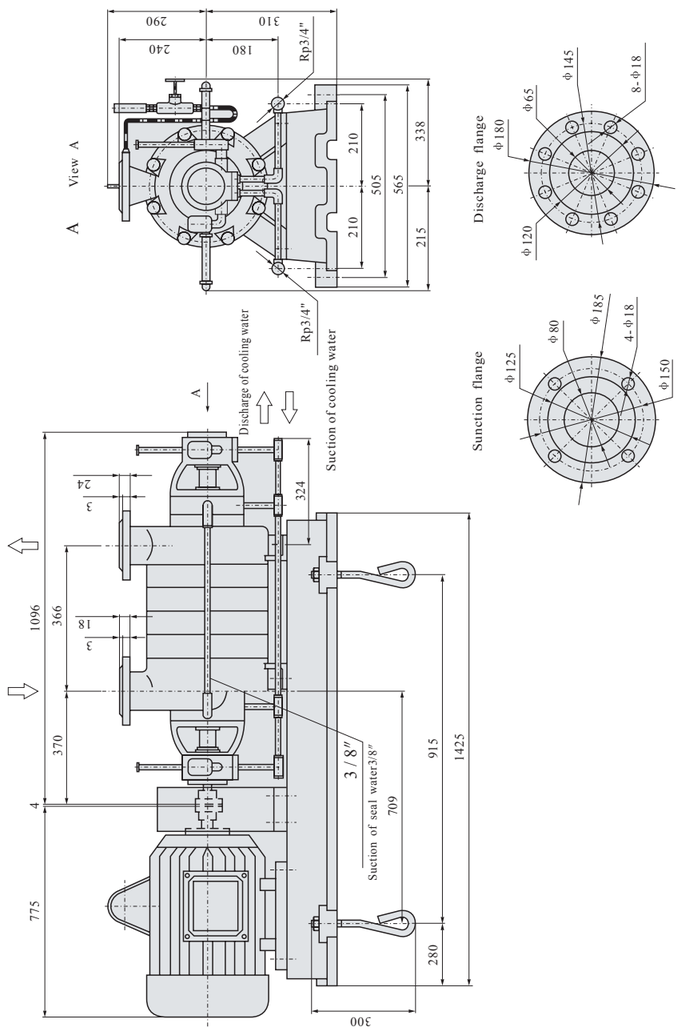

TORONTECH™
Pumps and Valves
TTAAT

TTAAT-Series of Low Pressure Heater Drainage Pumps

OVERALL DIMENSION

Overall Dimension for TTAAT Type Drainage Pump for Low Pressure Heater

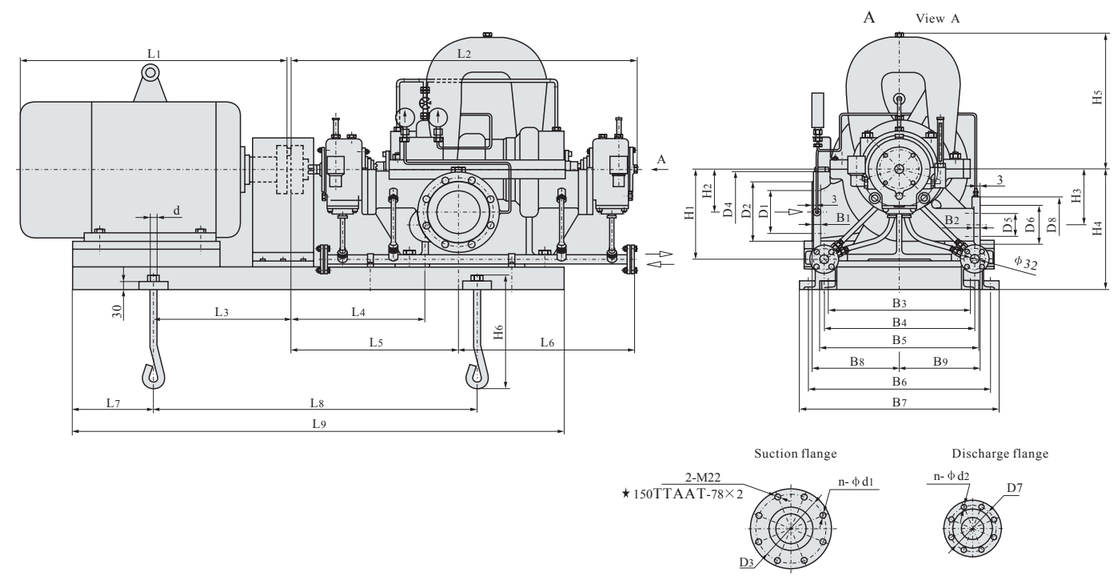

Type	Dimension																								
	L1	L2	L3	L4	L5	L6	L7	L8	L9	B1	B2	B3	B4	B5	B6	B7	B8	B9	H1	H2	H3	H4	H5	H6	d
100TTAAT-65×2	775	1056.5	300.5	447	591	469.5	325	870	1402.5	24	20	415	460	475	516	576	270	270	265	120	165.5	375	387	300	M20
125TTAAT-65×2	775	1143.5	298.5	432.5	548	543	330	940	1453.5	26	22	410	460	470	520	580	300	300	305	137.5	184	410	434.5	300	M20
150TTAAT-78×2	930	1200	475	465	580	610	280	1120	1700	28	22	490	620	550	630	690	300	280	314	150	195	420	475	400	M24
150TTAAT-90×2	1240	1288	665	492	622	670	420	1285	2115	32	30	530	570	600	875	945	330	355	420	155	224.5	510	478.5	400	M24
150TTAAT-115×2	1310	1288	665	492	622	670	420	1285	2115	32	30	530	570	600	875	945	330	355	430	155	237	520	478.5	400	M24

Type	Suction flange					Discharge flange				
	D_1	D_2	D_3	D_4	n-Φd_1	D_5	D_6	D_7	D_8	n-Φd_2
100TTAAT-65×2	100	155	180	215	8-Φ18	65	120	145	180	4-Φ18
125TTAAT-65×2	125	185	210	245	8-Φ18	80	135	160	195	8-Φ18
150TTAAT-78×2	150	210	240	280	8-Φ23	80	135	160	195	8-Φ18
150TTAAT-90×2	150	218	250	300	8-Φ25	100	160	190	230	8-Φ23
150TTAAT-115×2	150	218	250	300	8-Φ25	100	160	190	230	8-Φ23

Note: 200TTAAT-65×2 figure dimension, please come down on us.

Torontech Inc. - Canada
North American Headquarters
Tel: +1.416.368.2721
Fax: +1.416.981.7652
Email: sales@torontech.com
www.Torontech.com

Torontech Inc. - Canada
North American Headquarters
Tel: +1.416.368.2721
Fax: +1.416.981.7652
Email: sales@torontech.com
www.Torontech.com

Torontech™– North America
TEL:+1 (416) 368-2721
FAX:+1 (416) 981-7652
E-MAIL: sales@Torontech.com
WEB:www.Torontech.com

Please contact us for your nearest local office or distributor

Torontech Inc. - Canada
North American Headquarters
Tel: +1.416.368.2721
Fax: +1.416.981.7652
Email: sales@torontech.com
www.Torontech.com

Torontech Inc. - Canada
North American Headquarters
Tel: +1.416.368.2721
Fax: +1.416.981.7652
Email: sales@torontech.com
www.Torontech.com